PEGASI

PORTABLE BASKETBALL SYSTEM

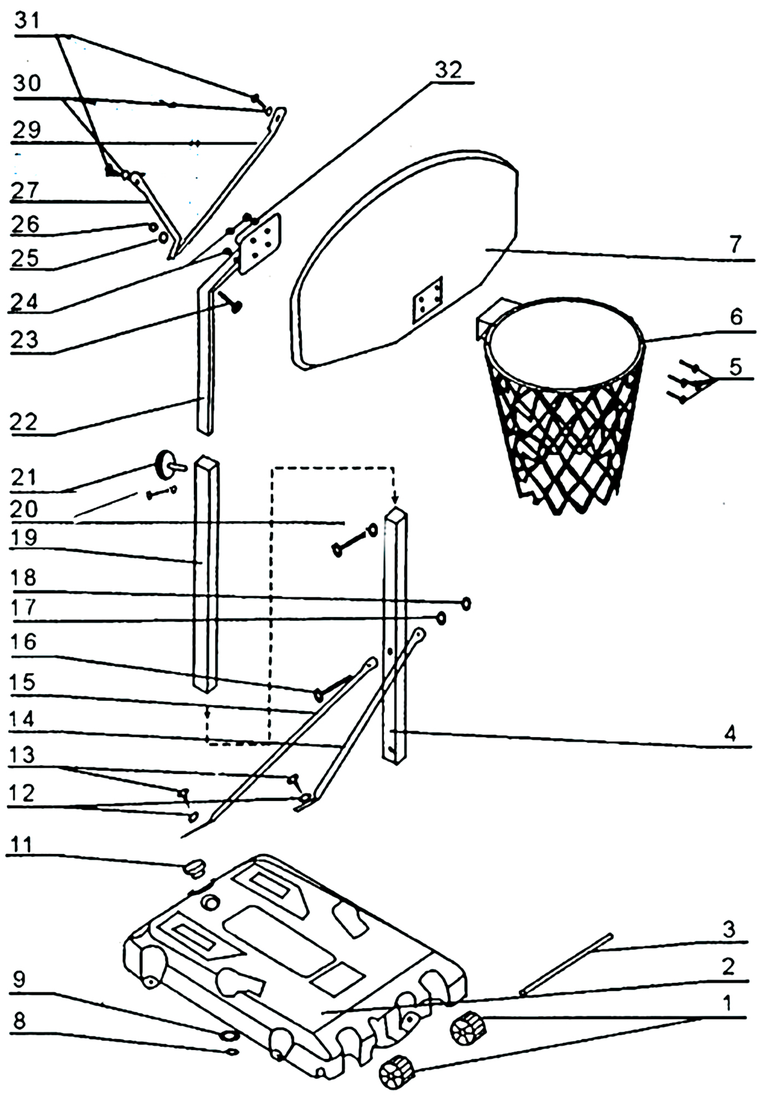

No.	Parts	Qty.
1	Wheel	2PCS
2	Base	1PC
3	Wheel shaft	1PC
4	Bottom tube	1PC
5	Screw	4PCS
6	Rim	1PC
7	Backboard	1PC
8	Nut	2PCS
9	Washer	4PCS
11	Lid	1PC
12	Washer	4PCS
13	Screw	2PCS
14	Support brace	1PC
15	Support brace	1PC
16	Screw	1PC
17	Washer	2PCS
18	Nut	1PC
19	Middle tube	1PC
20	Screw	2PCS
21	Plastic Bolt	1PC
22	Top tube	1PC
23	Screw	1PC
24	Nut	4PCS
25	Washer	2PCS
26	Nut	1PC
27	Backboard brace	1PC
29	Backboard brace	1PC
30	Washer	2PCS
31	Screw	2PCS
32	Washer	8PCS

ASSEMBLY STEPS

1. Base and bottom tube.
   Insert the wheel shaft(3) into the front holes of the base(2), also insert the left wheel, outer tube(4) and right wheel in turn. Fix one end of the 2 support braces(14)(15) on the base by screw(13), washer(9)(12) and nut(8). Then fix another end of the 2 support braces on the outer tube(4) by screw (16), washer(17), nut(18).

2. Rim, backboard and top tube.
   Assemble the rim(6), backboard(7) and top tube(22) by screw(5), nut (24), washer (32).

3. Backboard braces.
   Fix the backboard braces (27)(29) on the top tube (22) by screw (23)(31), washer(25)(30) and nut (26).

4. Middle tube and outer tube.
   Insert the middle tube (19) into the outer tube (4), use fix screw (20) to lock them.

5. Middle tube and top tube.
   Insert the top tube (22) into the middle tube (19). The height is adjustable as per requirement. Lock the tubes by the fix screw (21).

6. Fill the base with water, seal the filling hole by plastic lid (11).

IMPORTANT SAFETY INSTRUCTON

Those who assemble and use the system must read, understand and comply with all the followings, and the owner must make sure that all the players understand and follow all the rules:

1. Before assembling, the person who assemble the system must read the use and assemble instruction carefully and check all the parts in the carton to make sure they accord with the part list.
2. Before placing the basketball system, firstly people should choose the playing ground, the surface beneath the base should be horizontal. And the system should not be used until the base is fully filled with water or sand.
3. Before using, people should check the system for the stability of the base, the surface beneath the base should be smooth and free of gravel or other sharp objects which could cause the base leaking and losing the reliable stability. Keep organic materials away from the base.
4. People should not push or drag the base on the ground to avoid any damage to the non-metal base.
5. This system is not designed for forma match/compete. Dunk-type activities on the unit are not allowed. Do not wear jewels (rings, watches, necklace, etc) while using the system. Serious personal injury may occur or the system many fall down if jewelry is caught on the rim or net.
6. Do not use the unit during windy and/or severe weather conditions or the unit may tip over. Adjust the system to the lowest height or place the unit in a storage position.
7. Climbing the pole and carving the base are strictly prohibited.
8. The system must be removed and assembled only by adults who can safely handle the weight, children are not allowed to do so forever.
9. In order to prevent the base from being damaged when the water in the base become into ice, please make sure to empty the base and fill the base with 90kg sand when the temperature is under –0 oC.
10. Check the system often against loose and damaged parts. If any problems found, prompt precautions should be taken into action.